REVISIONS			
REV	DESCRIPTION	DATE	APPROVED
A	INITIAL DRAWING	17/ 12/09	NK

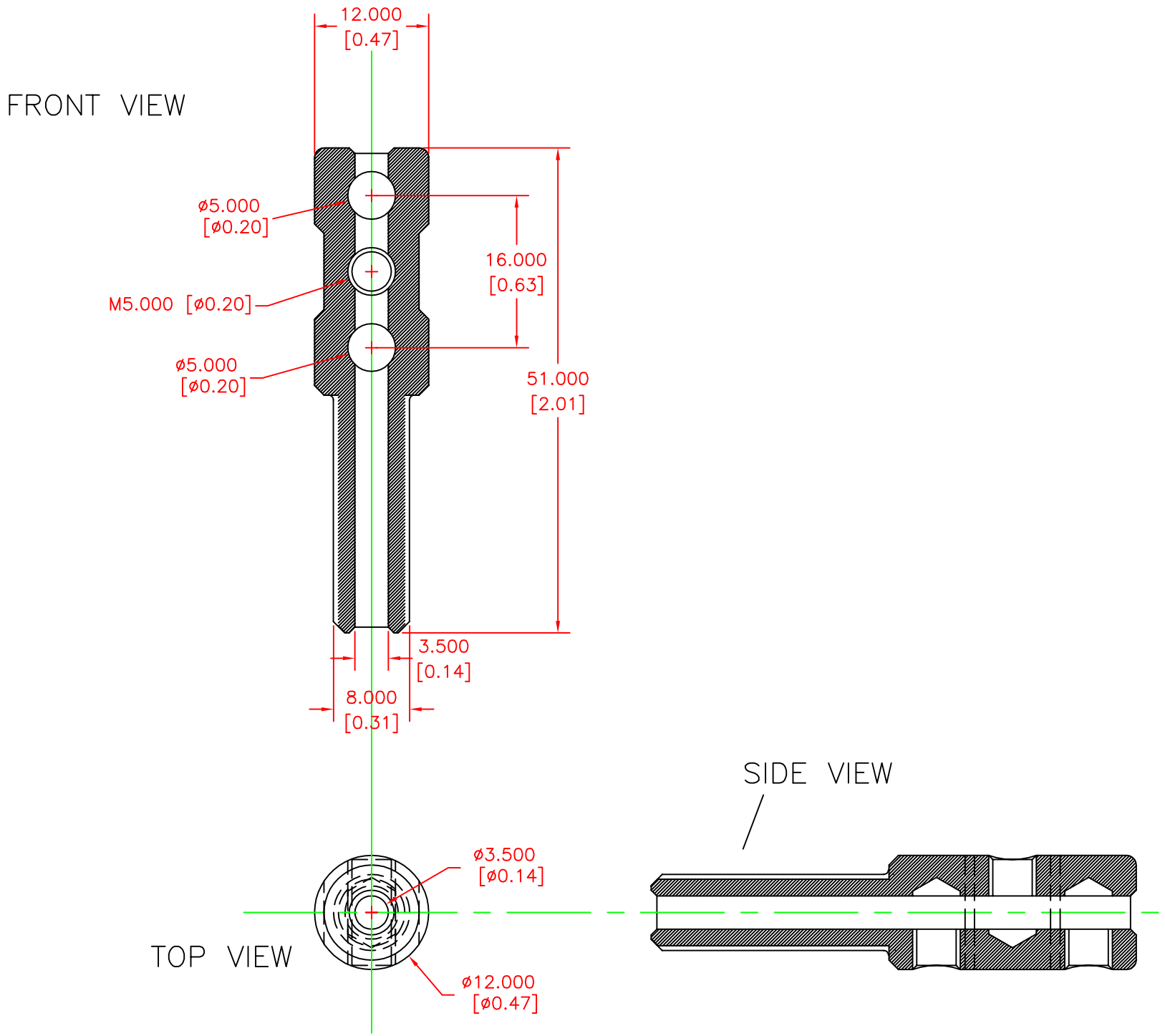

horiso®

22 - 26 Myrtle Street
Marrickville NSW 2204
Australia
www.horiso.com

T: (61 2) 8755 4500
F: (61 2) 8755 4555

Product Type: SWGE SWAGING ELEMENTS

Product Reference: SWAGE FIXING UNIVERSAL EA M8X50

SIZE:	FSCM NO:	DWG NO: 100861019	
Drawn: NAP NK	SCALE:	DATE: 1/ 12/09	SHEET

FNAME REVDATE USER